KRUEGER
Excellence in Air Distribution

KVPP- VERTICAL STACK FAN COIL

MODEL KVPP VERTICAL CONCEALED MASTER HIGH RISE FCU, 88" CABINET

JOB NAME _____
ENGINEER _____
CONTRACTOR _____
TAG _____

SUBMITTAL SHEET

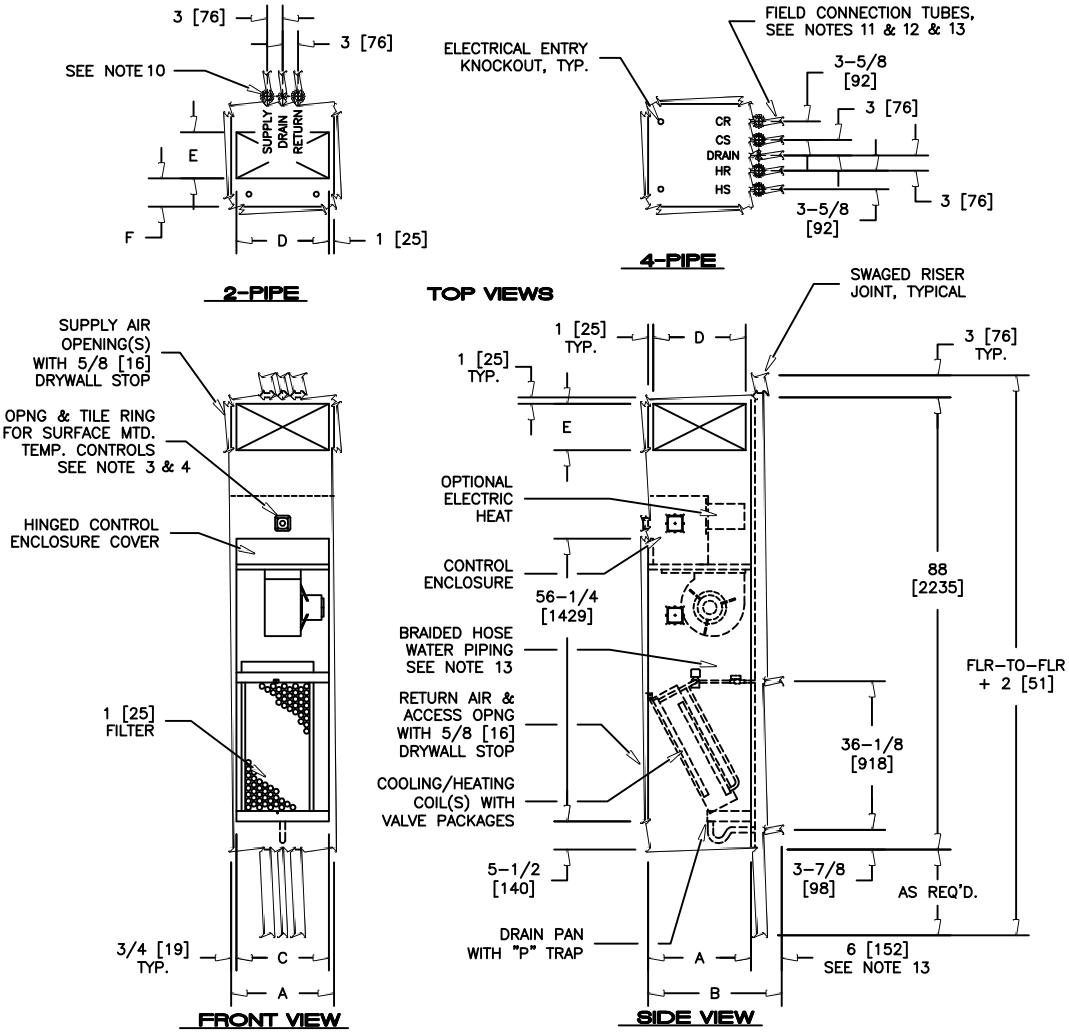

DIMENSIONS - IN [MM]						
UNIT SIZE	A	B	C	SINGLE/DOUBLE SUPPLY		F
				D	E	
03 & 04	18 [457]	24 [610]	16-1/2 [419]	16 [406]	8 [203]	6 [152]
06 & 08	20 [508]	26 [660]	18-1/2 [470]	18 [457]	12 [305]	6 [152]
10 & 12	24 [610]	30 [762]	22-1/2 [572]	22 [559]	14 [356]	8 [203]

NOTES:

1. ALL DIMENSIONS ARE INCHES [MM]. METRIC VALUES ARES OFT CONVERSION.
2. ALL DIMENSIONS ARE ±1/4 [6MM].
3. TILE RING INSTALLED ON FRONT OF UNIT (SHOWN) MAY MOVE TO LEFT OR RIGHT SIDE OF UNIT IN FIELD.
4. TILE RING OMITTED ON UNITS WITH "ADA" CONTROL MOUNTING LOCATION.
5. WIRING ELECTRICAL ENTRY POINT TO CONTROL ENCLOSURE IS FURNISHED/INSTALLED BY OTHERS IN FIELD.
6. RISERS AVAILABLE FROM 3/4" [19MM] TO 3" [76MM] DIAMETER WITH 1/2" [13MM] THICK INSULATION
7. RISERS ALSO AVAILABLE 3/4" [19MM] TO 2-1/2" [64MM] DIAMETER WITH 3/4" [19MM] THICK INSULATIONS.
8. PIPING/INSULATION BETWEEN MASTER-SLAVE UNITS IS FURNISHED/INSTALLED IN THE FIELD BY OTHERS.
9. RISER LENGTH IS 120" [3048MM] MAX, 100" [2540MM] MIN.
10. BACK RISER LOCATION SHOWN. SEE ARRANGEMENT DRAWINGS FOR AVAILABLE UNIT CONFIGURATIONS.
11. SLAVE UNIT STUBOUT DIMENSION IS APPROXIMATE AND VARIES WITH RISER DIAMETER.
12. STUBOUT EXTENDS APPROXIMATELY 4" FROM RISER TUBE.
13. WATER PIPING CONNECTIONS ARE 5/8" [16MM] O.D. AND DRAIN CONNECTION IS 7/8" [22MM] O.D.
14. FACTORY MOUNTED RISERS SHOW, RISERS MAY BE SHIPPED SEPARATELY.