JOB NAME _____
ARCHITECT _____
ENGINEER _____
CONTRACTOR _____
LOCATION _____

SUBMITTAL SHEET

Form Number GS0032.4 Effective Date 5/13
Replaces For GS0032.3

KRUEGER
Excellence in Air Distribution

6880-20, 56880-20 SERIES

INDUSTRIAL DOUBLE DEFLECTION SUPPLY GRILLE

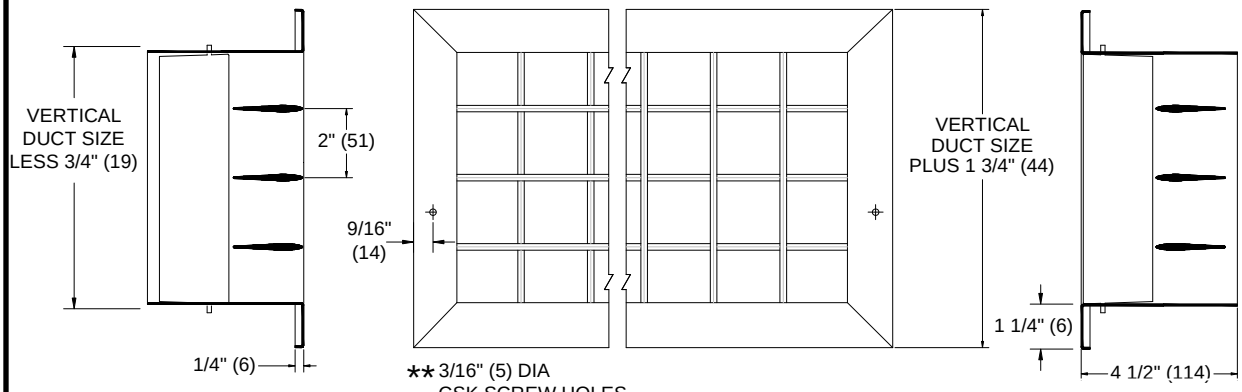

☐ **6880H-20**

☐ **56880H-20**

☐ **6880V-20**

☐ **56880V-20**

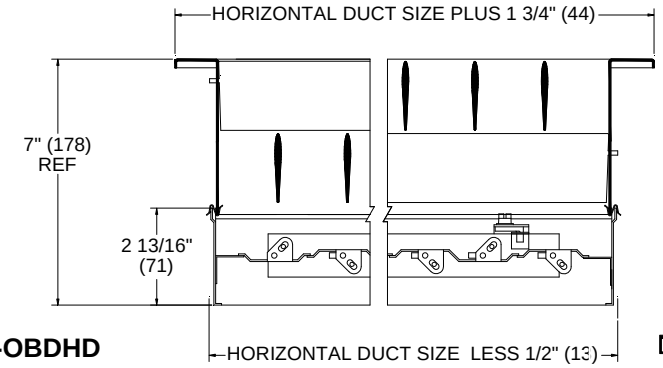

☐ **6880H-20-OBDHD**

☐ **56880H-20-OBDHD**

☐ **6880V-20-OBDHD**

☐ **56880V-20-OBDHD**

NOTES:

1. **6880-20** SERIES IS STEEL CONSTRUCTION WITH ADJUSTABLE EXTRUDED ALUMINUM BLADES
2. **56880-20** SERIES IS ALUMINUM CONSTRUCTION WITH ADJUSTABLE EXTRUDED ALUMINUM BLADES
3. MINIMUM SIZE OFFERED IS 6”x6” (152x152)
4. MAXIMUM SINGLE UNIT SIZE IS 48”x48” (1219x1219). MULTIPLE SECTIONS ARE FURNISHED FOR LARGER SIZES
5. STANDARD FINISH IS 44 BRITISH WHITE

ACCESSORIES:

❑ **OBDHD** STEEL HEAVY DUTY OPPOSED BLADE DAMPER

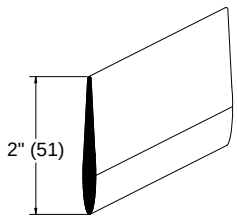

(5)6880-20 BLADE DETAIL

DIMENSIONS ARE GIVEN AS INCHES (MM)