14SCA/514SCA SERIES

Diffuser | Louvered Face, Adjustable

INTRODUCTION

The 14SCA series are square face, 3-cone, round neck ceiling diffusers with adjustable airflow pattern controllers between the cones that change the discharge pattern from horizontal to vertical. They are available in a variety of frame styles to help meet the architectural requirements of today's ceilings. The spacing of the inner cones in relation to the backpan result in a design possessing anti-smudge characteristics, preventing the buildup of particles on the ceiling, which is achieved by minimizing the low pressure region inherent to most 4-way directional blow diffusers. The 14SCA is typically used for high ceilings and spot heating or cooling applications in which airflow needs to be directed vertically in order to satisfy a specific load. It can also be applied as a seasonal air outlet device; adjusting for horizontal throw for cooling in warmer months and vertical throw for heating in colder months.

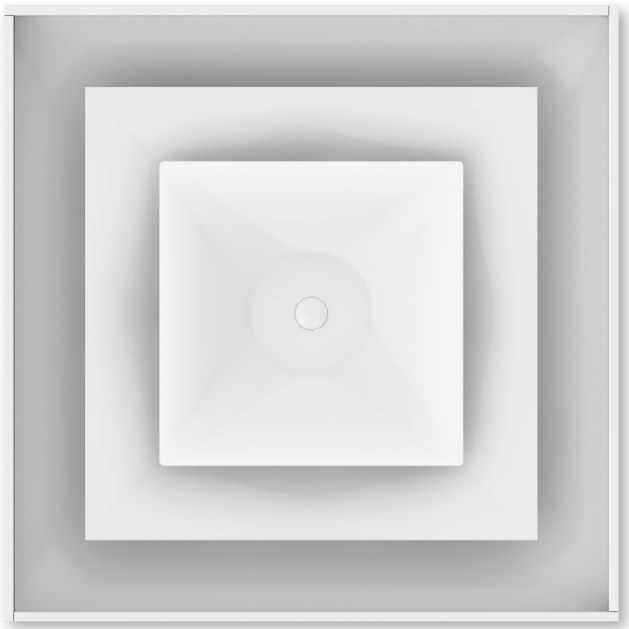

MODELS

14SCA - Steel, 3-Cone, Louvered Diffuser
14SCAFR - Steel, 3-Cone, Fire Rated, Adjustable Louvered Diffuser
514SCA - Aluminum, 3-Cone, Louvered Diffuser

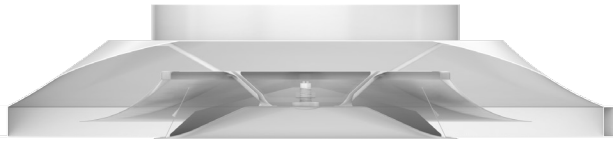

PANEL SIZES

- 12"x12", 20"x20", and 24"x24"
- 300x300mm and 600x600mm

FEATURES

- Three cones for optimum airflow control
- Adjustable airflow pattern controllers for vertical throw
- Great choice for variable air volume spaces
- Cones feature a one-piece stamped construction without mitered joints
- Round neck for easy connection to round duct
- Anti-smudge design prevents smeared ceilings

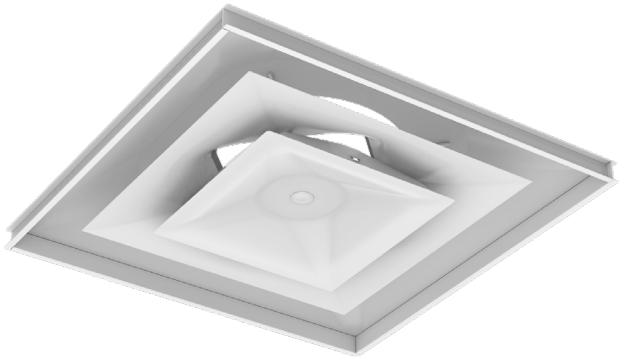

ACCESSORIES

- Optional round damper: radial, opposed blade, or butterfly
- Optional R6 insulated backpan
- Optional straightening grid
- Optional surface mounting frame
- Optional 30"x30" lay-in adapter frame
- Optional earthquake tabs



FINISHES

- Standard finish is #WHT White
- Optional finishes available

© Copyright Krueger 2024

DIMENSIONAL DATA | 14SCAFR (FIRE RATED)

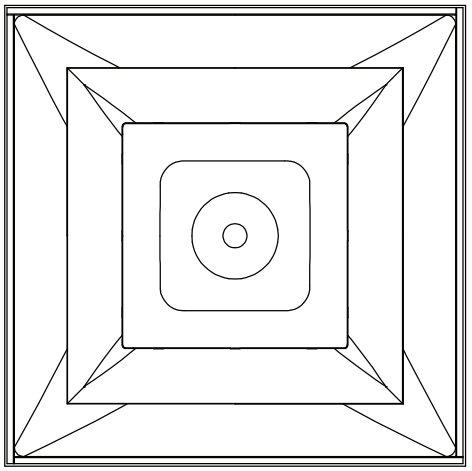

FACE VIEW

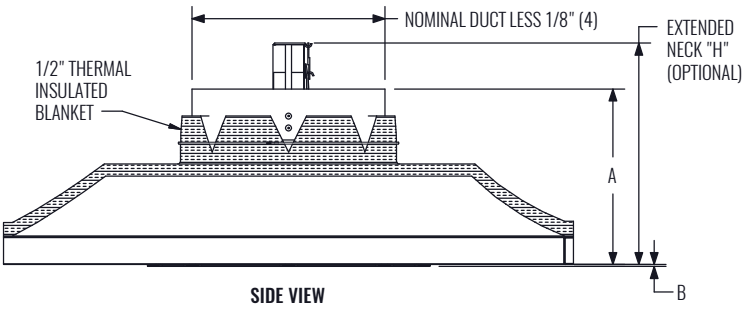

SIDE VIEW

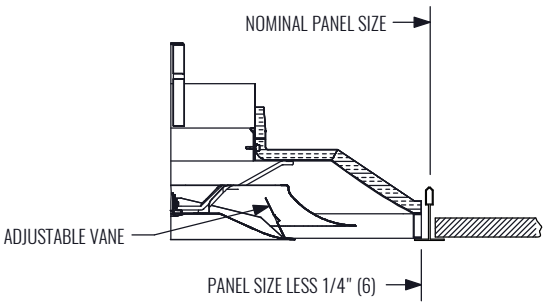

FRAME LTF (LAY-IN)

PANEL SIZE	NOMINAL DUCT	A	B	H
12"x12"	6", 7"	5 7/8"(149)	3/8" (10)	8 7/8" (225)
	8"	5 3/4"(146)	5/8"(16)	8 3/4" (222)
24"x24"	8"	7 5/8"(194)	1/4" (6)	10 5/8" (270)
	10"	7 3/4" (197)		10 5/8" (270)
	12", 14"			10 3/4" (273)
	15"			15 3/4" (400)

NOTES: Dimensions in parentheses are millimeters.

© Copyright Krueger 2024

PERFORMANCE DATA | 12”x12” MODULE, NO DAMPER | HORIZONTAL THROW

NECK SIZE	IP DATA					NC	METRIC DATA				
	NECK VEL	AIR FLOW	HZ Ps	HZ Pt	HZ THROW		NECK VEL	AIR FLOW	HZ Ps	HZ Pt	HZ THROW
	FPM	CFM	“WG	“WG	ft		m/s	L/s	Pa	Pa	m
4” DIA.	400	35	.002	0.012	1 - 1 - 2	-	2.03	17	0.5	3.0	0.3 - 0.3 - 0.6
	500	44	.002	0.018	1 - 2 - 3	-	2.54	21	0.5	4.5	0.3 - 0.6 - 0.9
	600	52	.004	0.026	1 - 2 - 4	-	3.05	25	1.0	6.5	0.3 - 0.6 - 1.2
	700	61	.005	0.036	1 - 2 - 4	-	3.56	29	1.2	9.0	0.3 - 0.6 - 1.2
	800	70	.006	0.046	2 - 2 - 5	13	4.06	33	1.5	11.5	0.6 - 0.6 - 1.5
	1000	87	.010	0.072	2 - 3 - 6	20	5.08	41	2.5	17.9	0.6 - 0.9 - 1.8
	1200	105	.014	0.104	2 - 4 - 7	25	6.10	50	3.5	25.9	0.6 - 1.2 - 2.1
	1400	122	.020	0.142	3 - 4 - 8	30	7.11	58	5.0	35.4	0.9 - 1.2 - 2.4
	1600	140	.025	0.185	3 - 5 - 8	34	8.13	66	6.2	46.1	0.9 - 1.5 - 2.4
5” DIA.	400	55	.008	0.018	1 - 2 - 3	-	2.03	26	2.0	4.5	0.3 - 0.6 - 0.9
	500	68	.012	0.028	1 - 2 - 4	-	2.54	32	3.0	7.0	0.3 - 0.6 - 1.2
	600	82	.019	0.041	2 - 2 - 5	-	3.05	39	4.7	10.2	0.6 - 0.6 - 1.5
	700	95	.025	0.056	2 - 3 - 5	14	3.56	45	6.2	13.9	0.6 - 0.9 - 1.5
	800	109	.033	0.073	2 - 3 - 6	18	4.06	51	8.2	18.2	0.6 - 0.9 - 1.8
	1000	136	.052	0.114	3 - 4 - 8	25	5.08	64	12.9	28.4	0.9 - 1.2 - 2.4
	1200	164	.074	0.164	3 - 5 - 9	31	6.10	77	18.4	40.8	0.9 - 1.5 - 2.7
	1400	191	.101	0.223	4 - 5 - 10	36	7.11	90	25.1	55.5	1.2 - 1.5 - 3.0
	1600	218	.131	0.291	4 - 6 - 10	40	8.13	103	32.6	72.5	1.2 - 1.8 - 3.0
6” DIA.	400	79	.016	0.026	1 - 2 - 4	-	2.03	37	4.0	6.5	0.3 - 0.6 - 1.2
	500	98	.025	0.041	2 - 2 - 5	-	2.54	46	6.2	10.2	0.6 - 0.6 - 1.5
	600	118	.037	0.059	2 - 3 - 6	14	3.05	56	9.2	14.7	0.6 - 0.9 - 1.8
	700	137	.049	0.080	2 - 3 - 7	19	3.56	65	12.2	19.9	0.6 - 0.9 - 2.1
	800	157	.065	0.105	2 - 4 - 7	23	4.06	74	16.2	26.1	0.6 - 1.2 - 2.1
	1000	196	.102	0.164	3 - 5 - 9	30	5.08	93	25.4	40.8	0.9 - 1.5 - 2.7
	1200	235	.146	0.236	4 - 6 - 11	36	6.10	111	36.4	58.8	1.2 - 1.8 - 3.4
	1400	274	.199	0.321	4 - 7 - 12	40	7.11	129	49.6	79.9	1.2 - 2.1 - 3.7
	1600	314	.259	0.419	5 - 7 - 13	45	8.13	148	64.5	104.3	1.5 - 2.1 - 4.0
7” DIA.	400	107	.026	0.036	1 - 2 - 4	-	2.03	50	6.5	9.0	0.3 - 0.6 - 1.2
	500	134	.040	0.056	2 - 3 - 5	12	2.54	63	10.0	13.9	0.6 - 0.9 - 1.5
	600	160	.058	0.080	2 - 3 - 7	18	3.05	76	14.4	19.9	0.6 - 0.9 - 2.1
	700	187	.079	0.110	3 - 4 - 8	23	3.56	88	19.7	27.4	0.9 - 1.2 - 2.4
	800	214	.103	0.143	3 - 4 - 9	27	4.06	101	25.6	35.6	0.9 - 1.2 - 2.7
	1000	267	.161	0.223	4 - 5 - 11	34	5.08	126	40.1	55.5	1.2 - 1.5 - 3.4
	1200	320	.232	0.322	4 - 7 - 13	40	6.10	151	57.8	80.2	1.2 - 2.1 - 4.0
	1400	374	.316	0.438	5 - 8 - 14	44	7.11	177	78.7	109.1	1.5 - 2.4 - 4.3
	1600	427	.412	0.572	6 - 9 - 15	49	8.13	202	102.6	142.4	1.8 - 2.7 - 4.6
8” DIA.	400	140	.037	0.047	2 - 2 - 5	-	2.03	66	9.2	11.7	0.6 - 0.6 - 1.5
	500	175	.057	0.073	2 - 3 - 6	16	2.54	82	14.2	18.2	0.6 - 0.9 - 1.8
	600	209	.083	0.105	2 - 4 - 7	22	3.05	99	20.7	26.1	0.6 - 1.2 - 2.1
	700	244	.112	0.143	3 - 4 - 9	26	3.56	115	27.9	35.6	0.9 - 1.2 - 2.7
	800	279	.147	0.187	3 - 5 - 10	31	4.06	132	36.6	46.6	0.9 - 1.5 - 3.0
	1000	349	.230	0.292	4 - 6 - 12	37	5.08	165	57.3	72.7	1.2 - 1.8 - 3.7
	1200	419	.331	0.421	5 - 7 - 14	43	6.10	198	82.4	104.8	1.5 - 2.1 - 4.3
	1400	489	.451	0.573	6 - 9 - 16	48	7.11	231	112.3	142.7	1.8 - 2.7 - 4.9
	1600	558	.588	0.748	7 - 10 - 17	52	8.13	263	146.4	186.3	2.1 - 3.0 - 5.2

NOTES: Throw values are given for temperature differences shown and terminal velocities of 150, 100, and 50 FPM. NC values are based on octave band 2 - 7 sound power levels minus a room absorption of 10dB, re 10^{-12} Watts. Dash in space denotes a NC or dB value of less than 10. Data was obtained from tests conducted in accordance with ANSI/ASHRAE Standard 70. See Krueger’s selection software for performance data not shown.

© Copyright Krueger 2024

PERFORMANCE DATA | 12”x12” MODULE, NO DAMPER | VERTICAL THROW

NECK SIZE	IP DATA					NC	METRIC DATA				
	NECK VEL	AIR FLOW	VT Ps	VT Pt	VT THROW		NECK VEL	AIR FLOW	VT Ps	VT Pt	VT THROW
	FPM	CFM	“WG	“WG	ft		m/s	L/s	Pa	Pa	m
4” DIA.	400	35	0.003	0.013	1 - 1 - 2	-	2.03	17	0.7	3.2	0.3 - 0.3 - 0.6
	500	44	0.005	0.021	1 - 1 - 2	-	2.54	21	1.2	5.2	0.3 - 0.3 - 0.6
	600	52	0.008	0.030	1 - 1 - 3	-	3.05	25	2.0	7.5	0.3 - 0.3 - 0.9
	700	61	0.010	0.041	1 - 2 - 3	-	3.56	29	2.5	10.2	0.3 - 0.6 - 0.9
	800	70	0.013	0.053	1 - 2 - 3	-	4.06	33	3.2	13.2	0.3 - 0.6 - 0.9
	1000	87	0.021	0.083	1 - 2 - 3	16	5.08	41	5.2	20.7	0.3 - 0.6 - 0.9
	1200	105	0.030	0.120	2 - 3 - 4	21	6.10	50	7.5	29.9	0.6 - 0.9 - 1.2
	1400	122	0.042	0.164	2 - 3 - 4	26	7.11	58	10.5	40.8	0.6 - 0.9 - 1.2
	1600	140	0.054	0.214	2 - 3 - 4	30	8.13	66	13.4	53.3	0.6 - 0.9 - 1.2
5” DIA.	400	55	0.012	0.022	1 - 1 - 2	-	2.03	26	3.0	5.5	0.3 - 0.3 - 0.6
	500	68	0.018	0.034	1 - 1 - 3	-	2.54	32	4.5	8.5	0.3 - 0.3 - 0.9
	600	82	0.027	0.049	1 - 2 - 3	-	3.05	39	6.7	12.2	0.3 - 0.6 - 0.9
	700	95	0.035	0.066	1 - 2 - 3	12	3.56	45	8.7	16.4	0.3 - 0.6 - 0.9
	800	109	0.046	0.086	1 - 2 - 4	15	4.06	51	11.5	21.4	0.3 - 0.6 - 1.2
	1000	136	0.073	0.135	2 - 3 - 4	22	5.08	64	18.2	33.6	0.6 - 0.9 - 1.2
	1200	164	0.104	0.194	2 - 3 - 5	27	6.10	77	25.9	48.3	0.6 - 0.9 - 1.5
	1400	191	0.143	0.265	3 - 3 - 5	32	7.11	90	35.6	66.0	0.9 - 0.9 - 1.5
	1600	218	0.186	0.346	3 - 4 - 5	36	8.13	103	46.3	86.2	0.9 - 1.2 - 1.5
6” DIA.	400	79	0.022	0.032	1 - 1 - 3	-	2.03	37	5.5	8.0	0.3 - 0.3 - 0.9
	500	98	0.033	0.049	1 - 2 - 3	-	2.54	46	8.2	12.2	0.3 - 0.6 - 0.9
	600	118	0.049	0.071	1 - 2 - 4	12	3.05	56	12.2	17.7	0.3 - 0.6 - 1.2
	700	137	0.066	0.097	2 - 2 - 4	17	3.56	65	16.4	24.2	0.6 - 0.6 - 1.2
	800	157	0.086	0.126	2 - 3 - 4	21	4.06	74	21.4	31.4	0.6 - 0.9 - 1.2
	1000	196	0.136	0.198	2 - 3 - 5	27	5.08	93	33.9	49.3	0.6 - 0.9 - 1.5
	1200	235	0.194	0.284	3 - 4 - 5	32	6.10	111	48.3	70.7	0.9 - 1.2 - 1.5
	1400	274	0.265	0.387	3 - 4 - 6	37	7.11	129	66.0	96.4	0.9 - 1.2 - 1.8
	1600	314	0.346	0.506	4 - 4 - 6	41	8.13	148	86.2	126.0	1.2 - 1.2 - 1.8
7” DIA.	400	107	0.034	0.044	1 - 2 - 3	-	2.03	50	8.5	11.0	0.3 - 0.6 - 0.9
	500	134	0.052	0.068	1 - 2 - 4	-	2.54	63	12.9	16.9	0.3 - 0.6 - 1.2
	600	160	0.076	0.098	2 - 2 - 4	16	3.05	76	18.9	24.4	0.6 - 0.6 - 1.2
	700	187	0.102	0.133	2 - 3 - 5	21	3.56	88	25.4	33.1	0.6 - 0.9 - 1.5
	800	214	0.134	0.174	2 - 3 - 5	25	4.06	101	33.4	43.3	0.6 - 0.9 - 1.5
	1000	267	0.210	0.272	3 - 4 - 6	31	5.08	126	52.3	67.7	0.9 - 1.2 - 1.8
	1200	320	0.303	0.393	3 - 4 - 6	37	6.10	151	75.4	97.9	0.9 - 1.2 - 1.8
	1400	374	0.411	0.533	4 - 5 - 7	41	7.11	177	102.3	132.7	1.2 - 1.5 - 2.1
	1600	427	0.536	0.696	4 - 5 - 7	45	8.13	202	133.5	173.3	1.2 - 1.5 - 2.1
8” DIA.	400	140	0.047	0.057	1 - 2 - 4	-	2.03	66	11.7	14.2	0.3 - 0.6 - 1.2
	500	175	0.074	0.090	1 - 2 - 4	15	2.54	82	18.4	22.4	0.3 - 0.6 - 1.2
	600	209	0.107	0.129	2 - 3 - 5	20	3.05	99	26.6	32.1	0.6 - 0.9 - 1.5
	700	244	0.144	0.175	2 - 3 - 6	25	3.56	115	35.9	43.6	0.6 - 0.9 - 1.8
	800	279	0.189	0.229	2 - 4 - 6	29	4.06	132	47.1	57.0	0.6 - 1.2 - 1.8
	1000	349	0.296	0.358	3 - 4 - 7	35	5.08	165	73.7	89.1	0.9 - 1.2 - 2.1
	1200	419	0.426	0.516	4 - 5 - 7	41	6.10	198	106.1	128.5	1.2 - 1.5 - 2.1
	1400	489	0.580	0.702	4 - 6 - 8	45	7.11	231	144.4	174.8	1.2 - 1.8 - 2.4
	1600	558	0.757	0.917	5 - 6 - 8	49	8.13	263	188.5	228.3	1.5 - 1.8 - 2.4

NOTES: Throw values are given for temperature differences shown and terminal velocities of 150, 100, and 50 FPM. NC values are based on octave band 2 - 7 sound power levels minus a room absorption of 10dB, re 10^{-12} Watts. Dash in space denotes a NC or dB value of less than 10. Data was obtained from tests conducted in accordance with ANSI/ASHRAE Standard 70. See Krueger’s selection software for performance data not shown.

© Copyright Krueger 2024

PERFORMANCE DATA | 24”x24” MODULE, NO DAMPER | HORIZONTAL THROW

NECK SIZE	IP DATA					NC	METRIC DATA				
	NECK VEL	AIR FLOW	HZ Ps	HZ Pt	HZ THROW		NECK VEL	AIR FLOW	HZ Ps	HZ Pt	HZ THROW
	FPM	CFM	“WG	“WG	ft		m/s	L/s	Pa	Pa	m
6” DIA.	400	79	.008	0.018	2 - 3 - 5	-	2.03	37	2.0	4.5	0.6 - 0.9 - 1.5
	500	98	.012	0.028	2 - 3 - 6	-	2.54	46	3.0	7.0	0.6 - 0.9 - 1.8
	600	118	.018	0.040	3 - 4 - 7	-	3.05	56	4.5	10.0	0.9 - 1.2 - 2.1
	700	137	.024	0.055	3 - 5 - 8	14	3.56	65	6.0	13.7	0.9 - 1.5 - 2.4
	800	157	.032	0.072	3 - 6 - 8	18	4.06	74	8.0	17.9	0.9 - 1.8 - 2.4
	1000	196	.050	0.112	4 - 7 - 9	25	5.08	93	12.5	27.9	1.2 - 2.1 - 2.7
	1200	235	.072	0.162	4 - 7 - 10	30	6.10	111	17.9	40.3	1.2 - 2.1 - 3.0
	1400	274	.098	0.220	4 - 7 - 11	35	7.11	129	24.4	54.8	1.2 - 2.1 - 3.4
	1600	314	.127	0.287	5 - 8 - 12	39	8.13	148	31.6	71.5	1.5 - 2.4 - 3.7
8” DIA.	400	140	.008	0.018	2 - 3 - 5	-	2.03	66	2.0	4.5	0.6 - 0.9 - 1.5
	500	175	.012	0.028	2 - 3 - 6	-	2.54	82	3.0	7.0	0.6 - 0.9 - 1.8
	600	209	.022	0.044	3 - 4 - 8	12	3.05	99	5.5	11.0	0.9 - 1.2 - 2.4
	700	244	.025	0.056	3 - 5 - 9	17	3.56	115	6.2	13.9	0.9 - 1.5 - 2.7
	800	279	.033	0.073	3 - 5 - 10	21	4.06	132	8.2	18.2	0.9 - 1.5 - 3.0
	1000	349	.052	0.114	4 - 6 - 11	28	5.08	165	12.9	28.4	1.2 - 1.8 - 3.4
	1200	419	.074	0.164	5 - 8 - 12	33	6.10	198	18.4	40.8	1.5 - 2.4 - 3.7
	1400	489	.101	0.223	6 - 9 - 13	38	7.11	231	25.1	55.5	1.8 - 2.7 - 4.0
	1600	558	.131	0.291	7 - 10 - 14	42	8.13	263	32.6	72.5	2.1 - 3.0 - 4.3
10” DIA.	400	218	.008	0.018	2 - 3 - 6	-	2.03	103	2.0	4.5	0.6 - 0.9 - 1.8
	500	273	.013	0.029	3 - 4 - 8	-	2.54	129	3.2	7.2	0.9 - 1.2 - 2.4
	600	327	.019	0.041	3 - 5 - 10	15	3.05	154	4.7	10.2	0.9 - 1.5 - 3.0
	700	382	.025	0.056	4 - 6 - 11	20	3.56	180	6.2	13.9	1.2 - 1.8 - 3.4
	800	436	.033	0.073	4 - 6 - 13	24	4.06	206	8.2	18.2	1.2 - 1.8 - 4.0
	1000	545	.052	0.114	5 - 8 - 14	31	5.08	257	12.9	28.4	1.5 - 2.4 - 4.3
	1200	654	.074	0.164	6 - 10 - 15	37	6.10	309	18.4	40.8	1.8 - 3.0 - 4.6
	1400	763	.102	0.224	8 - 11 - 17	41	7.11	360	25.4	55.8	2.4 - 3.4 - 5.2
	1600	872	.132	0.292	9 - 13 - 18	45	8.13	412	32.9	72.7	2.7 - 4.0 - 5.5
12” DIA.	400	314	.008	0.018	3 - 4 - 8	-	2.03	148	2.0	4.5	0.9 - 1.2 - 2.4
	500	393	.013	0.029	3 - 5 - 10	12	2.54	185	3.2	7.2	0.9 - 1.5 - 3.0
	600	471	.019	0.041	4 - 6 - 12	18	3.05	222	4.7	10.2	1.2 - 1.8 - 3.7
	700	550	.025	0.056	5 - 7 - 14	23	3.56	260	6.2	13.9	1.5 - 2.1 - 4.3
	800	628	.033	0.073	5 - 8 - 15	27	4.06	296	8.2	18.2	1.5 - 2.4 - 4.6
	1000	785	.052	0.114	6 - 10 - 17	34	5.08	370	12.9	28.4	1.8 - 3.0 - 5.2
	1200	942	.075	0.165	8 - 12 - 18	39	6.10	445	18.7	41.1	2.4 - 3.7 - 5.5
	1400	1099	.102	0.224	9 - 14 - 20	44	7.11	519	25.4	55.8	2.7 - 4.3 - 6.1
	1600	1256	.133	0.293	10 - 15 - 21	48	8.13	593	33.1	73.0	3.0 - 4.6 - 6.4
14” DIA.	400	428	.019	0.029	5 - 8 - 15	-	2.03	202	4.7	7.2	1.5 - 2.4 - 4.6
	500	535	.029	0.045	6 - 10 - 19	-	2.54	252	7.2	11.2	1.8 - 3.0 - 5.8
	600	641	.043	0.065	8 - 11 - 21	12	3.05	303	10.7	16.2	2.4 - 3.4 - 6.4
	700	748	.058	0.089	9 - 13 - 22	18	3.56	353	14.4	22.2	2.7 - 4.0 - 6.7
	800	855	.076	0.116	10 - 15 - 24	23	4.06	404	18.9	28.9	3.0 - 4.6 - 7.3
	1000	1069	.119	0.181	13 - 19 - 27	32	5.08	505	29.6	45.1	4.0 - 5.8 - 8.2
	1200	1283	.171	0.261	15 - 21 - 29	39	6.10	606	42.6	65.0	4.6 - 6.4 - 8.8
	1400	1497	.233	0.355	18 - 22 - 31	45	7.11	707	58.0	88.4	5.5 - 6.7 - 9.4
	1600	1710	.304	0.464	19 - 24 - 34	50	8.13	807	75.7	115.5	5.8 - 7.3 - 10.4
15” DIA.	400	491	.021	0.031	5 - 8 - 16	-	2.03	232	5.2	7.7	1.5 - 2.4 - 4.9
	500	614	.032	0.048	7 - 10 - 20	-	2.54	290	8.0	12.0	2.1 - 3.0 - 6.1
	600	736	.047	0.069	8 - 12 - 22	13	3.05	347	11.7	17.2	2.4 - 3.7 - 6.7
	700	859	.063	0.094	10 - 14 - 24	19	3.56	405	15.7	23.4	3.0 - 4.3 - 7.3
	800	982	.083	0.123	11 - 16 - 25	24	4.06	463	20.7	30.6	3.4 - 4.9 - 7.6
	1000	1227	.130	0.192	14 - 20 - 28	32	5.08	579	32.4	47.8	4.3 - 6.1 - 8.5
	1200	1472	.187	0.277	16 - 22 - 31	39	6.10	695	46.6	69.0	4.9 - 6.7 - 9.4
	1400	1718	.255	0.377	19 - 24 - 34	45	7.11	811	63.5	93.9	5.8 - 7.3 - 10.4
	1600	1963	.332	0.492	21 - 25 - 36	50	8.13	926	82.7	122.5	6.4 - 7.6 - 11.0

NOTES: Throw values are given for isothermal conditions and terminal velocities of 150, 100, and 50 FPM (0.75, 0.50, and 0.25 m/s). NC values are based on octave band 2 - 7 sound power levels minus a room absorption of 10dB, re 10^{-12} Watts. Dash in space denotes a NC or dB value of less than 10. Data was obtained from tests conducted in accordance with ANSI/ASHRAE Standard 70, ISO Standard 5219, and ISO Standard 3741. See Krueger’s selection software for performance data not shown.

© Copyright Krueger 2024

14SCA/514SCA SERIES

Diffuser | Louvered Face, Adjustable

KRUEGER

PERFORMANCE DATA | 24”x24” MODULE, NO DAMPER | VERTICAL THROW

NECK SIZE	IP DATA					NC	METRIC DATA				
	NECK VEL	AIR FLOW	VT Ps	VT Pt	VT THROW		NECK VEL	AIR FLOW	VT Ps	VT Pt	VT THROW
	FPM	CFM	“WG	“WG	ft		m/s	L/s	Pa	Pa	m
6” DIA.	400	79	0.009	0.019	0 - 1 - 1	-	2.03	37	2.2	4.7	0.0 - 0.3 - 0.3
	500	98	0.014	0.030	1 - 1 - 2	-	2.54	46	3.5	7.5	0.3 - 0.3 - 0.6
	600	118	0.021	0.043	1 - 1 - 2	-	3.05	56	5.2	10.7	0.3 - 0.3 - 0.6
	700	137	0.027	0.058	1 - 1 - 2	13	3.56	65	6.7	14.4	0.3 - 0.3 - 0.6
	800	157	0.036	0.076	1 - 1 - 3	17	4.06	74	9.0	18.9	0.3 - 0.3 - 0.9
	1000	196	0.056	0.118	1 - 1 - 4	24	5.08	93	13.9	29.4	0.3 - 0.3 - 1.2
	1200	235	0.081	0.171	1 - 2 - 4	29	6.10	111	20.2	42.6	0.3 - 0.6 - 1.2
	1400	274	0.110	0.232	1 - 2 - 4	34	7.11	129	27.4	57.8	0.3 - 0.6 - 1.2
	1600	314	0.143	0.303	1 - 2 - 5	38	8.13	148	35.6	75.4	0.3 - 0.6 - 1.5
8” DIA.	400	140	0.012	0.022	0 - 1 - 1	-	2.03	66	3.0	5.5	0.0 - 0.3 - 0.3
	500	175	0.018	0.034	1 - 1 - 2	-	2.54	82	4.5	8.5	0.3 - 0.3 - 0.6
	600	209	0.027	0.049	1 - 1 - 2	12	3.05	99	6.7	12.2	0.3 - 0.3 - 0.6
	700	244	0.036	0.067	1 - 1 - 2	16	3.56	115	9.0	16.7	0.3 - 0.3 - 0.6
	800	279	0.048	0.088	1 - 1 - 3	20	4.06	132	12.0	21.9	0.3 - 0.3 - 0.9
	1000	349	0.075	0.137	1 - 2 - 4	27	5.08	165	18.7	34.1	0.3 - 0.6 - 1.2
	1200	419	0.107	0.197	1 - 2 - 4	32	6.10	198	26.6	49.1	0.3 - 0.6 - 1.2
	1400	489	0.147	0.269	2 - 2 - 5	37	7.11	231	36.6	67.0	0.6 - 0.6 - 1.5
	1600	558	0.191	0.351	2 - 3 - 6	41	8.13	263	47.6	87.4	0.6 - 0.9 - 1.8
10” DIA.	400	218	0.020	0.030	1 - 1 - 2	-	2.03	103	5.0	7.5	0.3 - 0.3 - 0.6
	500	273	0.031	0.047	1 - 1 - 2	12	2.54	129	7.7	11.7	0.3 - 0.3 - 0.6
	600	327	0.046	0.068	1 - 1 - 3	18	3.05	154	11.5	16.9	0.3 - 0.3 - 0.9
	700	382	0.061	0.092	1 - 2 - 3	22	3.56	180	15.2	22.9	0.3 - 0.6 - 0.9
	800	436	0.080	0.120	1 - 2 - 4	26	4.06	206	19.9	29.9	0.3 - 0.6 - 1.2
	1000	545	0.126	0.188	1 - 2 - 4	33	5.08	257	31.4	46.8	0.3 - 0.6 - 1.2
	1200	654	0.181	0.271	2 - 3 - 5	38	6.10	309	45.1	67.5	0.6 - 0.9 - 1.5
	1400	763	0.247	0.369	2 - 3 - 6	43	7.11	360	61.5	91.9	0.6 - 0.9 - 1.8
	1600	872	0.322	0.482	2 - 4 - 7	47	8.13	412	80.2	120.0	0.6 - 1.2 - 2.1
12” DIA.	400	314	0.030	0.040	1 - 1 - 2	-	2.03	148	7.5	10.0	0.3 - 0.3 - 0.6
	500	393	0.047	0.063	1 - 1 - 3	17	2.54	185	11.7	15.7	0.3 - 0.3 - 0.9
	600	471	0.068	0.090	1 - 2 - 3	23	3.05	222	16.9	22.4	0.3 - 0.6 - 0.9
	700	550	0.092	0.123	1 - 2 - 4	27	3.56	260	22.9	30.6	0.3 - 0.6 - 1.2
	800	628	0.121	0.161	1 - 2 - 4	31	4.06	296	30.1	40.1	0.3 - 0.6 - 1.2
	1000	785	0.189	0.251	2 - 3 - 5	38	5.08	370	47.1	62.5	0.6 - 0.9 - 1.5
	1200	942	0.271	0.361	2 - 3 - 6	43	6.10	445	67.5	89.9	0.6 - 0.9 - 1.8
	1400	1099	0.370	0.492	2 - 4 - 7	48	7.11	519	92.1	122.5	0.6 - 1.2 - 2.1
	1600	1256	0.482	0.642	3 - 4 - 9	52	8.13	593	120.0	159.9	0.9 - 1.2 - 2.7
14” DIA.	400	428	0.034	0.044	2 - 5 - 7	12	2.03	202	8.5	11.0	0.6 - 1.5 - 2.1
	500	535	0.052	0.068	3 - 6 - 8	18	2.54	252	12.9	16.9	0.9 - 1.8 - 2.4
	600	641	0.076	0.098	5 - 6 - 9	23	3.05	303	18.9	24.4	1.5 - 1.8 - 2.7
	700	748	0.103	0.134	6 - 7 - 10	28	3.56	353	25.6	33.4	1.8 - 2.1 - 3.0
	800	855	0.135	0.175	6 - 7 - 10	32	4.06	404	33.6	43.6	1.8 - 2.1 - 3.0
	1000	1069	0.211	0.273	7 - 8 - 12	38	5.08	505	52.5	68.0	2.1 - 2.4 - 3.7
	1200	1283	0.303	0.393	7 - 9 - 13	43	6.10	606	75.4	97.9	2.1 - 2.7 - 4.0
	1400	1497	0.413	0.535	8 - 10 - 14	48	7.11	707	102.8	133.2	2.4 - 3.0 - 4.3
	1600	1710	0.539	0.699	8 - 10 - 15	51	8.13	807	134.2	174.1	2.4 - 3.0 - 4.6
15” DIA.	400	491	0.031	0.041	2 - 5 - 8	-	2.03	232	7.7	10.2	0.6 - 1.5 - 2.4
	500	614	0.048	0.064	4 - 6 - 9	17	2.54	290	12.0	15.9	1.2 - 1.8 - 2.7
	600	736	0.070	0.092	5 - 7 - 10	22	3.05	347	17.4	22.9	1.5 - 2.1 - 3.0
	700	859	0.094	0.125	6 - 7 - 10	27	3.56	405	23.4	31.1	1.8 - 2.1 - 3.0
	800	982	0.124	0.164	6 - 8 - 11	31	4.06	463	30.9	40.8	1.8 - 2.4 - 3.4
	1000	1227	0.194	0.256	7 - 9 - 12	37	5.08	579	48.3	63.7	2.1 - 2.7 - 3.7
	1200	1472	0.279	0.369	8 - 10 - 14	42	6.10	695	69.5	91.9	2.4 - 3.0 - 4.3
	1400	1718	0.380	0.502	8 - 10 - 15	47	7.11	811	94.6	125.0	2.4 - 3.0 - 4.6
	1600	1963	0.495	0.655	9 - 11 - 16	50	8.13	926	123.3	163.1	2.7 - 3.4 - 4.9

NOTES: Throw values are given for isothermal conditions and terminal velocities of 150, 100, and 50 FPM (0.75, 0.50, and 0.25 m/s). NC values are based on octave band 2 - 7 sound power levels minus a room absorption of 10dB, re 10^{-12} Watts. Dash in space denotes a NC or dB value of less than 10. Data was obtained from tests conducted in accordance with ANSI/ASHRAE Standard 70, ISO Standard 5219, and ISO Standard 3741. See Krueger’s selection software for performance data not shown.

© Copyright Krueger 2024

14SCA/514SCA SERIES

Diffuser | Louvered Face, Adjustable

KRUEGER

ENGINEERING SPECIFICATION & CONFIGURATION

14SCAFR

The drop cone, square face adjustable diffuser shall be Krueger model 14SCAFR (steel). The diffuser must be UL classified fire rated ceiling diffuser assembly listed in Underwriters Laboratories Fire Resistance Directory. The diffuser shall be tested in accordance with UL 263 and must meet NFPA 90 requirements. The diffuser must be able to operate in three-hour fire rated, exposed grid suspended ceiling. The 14SCAFR model shall be constructed of three precision die-stamped cones. The back cone shall have an integrally drawn neck for duct connections. Welded-in inlets and corner joints are not acceptable. The two inner cones shall be constructed as a single, removable inner cone assembly for easy installation and cleaning. The inner cone assembly of the 14SCA-FR shall include adjustable vanes to change the airflow discharge from fully horizontal to fully vertical. The inner cone assembly must have a hole with removable plug in the center to allow quick adjustment of an optional inlet damper without removing the inner cone assembly. Diffusers shall be constructed of 22-gauge steel. The thermal protection blanket shall not contain asbestos.

Optional volume adjustment damper shall be constructed of heavy gauge steel. Damper must be operable from the face of the diffuser. Optional sectorizing baffles shall be available to restrict the discharge air in certain directions.

PERFORMANCE

The manufacturer shall provide published (printed or electronic) performance data for the diffuser. Performance data shall include 2 - 7 octave band sound power levels. The diffuser shall be tested in accordance to the data standards at the time of product introduction or ANSI/ASHRAE Standard 70.

FINISH

The paint finish shall be #44 British White and be an anodic acrylic paint, baked at 315˚ for 30 minutes. The paint thickness shall be 0.8 - 1.0 mils, gloss at 60˚ per ASTM D523-89 of 50 - 85%, pencil hardness per ASTM D3363-92A of HB - H, crosshatch adhesion per ASTM D3359-83 of 4B - 5B, impact per ASTM D2794-93 of direct impact >100 in/lb and reverse impact >80 in/lb, salt spray per ASTM B117-9048 of 96 hours, humidity per ASTM D2247-92 of >500 hours and water soak per ASTM D870-92 of 250 hours.

1. **SERIES: (XXXXXXX)**
   14SCAFR - Steel, 3-Cone, Fire Rated, Adjustable Diffuser

2. **ROUND NECK: (XX)**
   6”, 7”, 8”, 10”, 12”, 14”, or 15”

3. **FRAME: (XXX)**
   LTF - Lay-in T-Bar

4. **PANEL: (XX)x(XX)**
   12x12 - 12”x12”
   24x24 - 24”x24”

5. **EXTENDED NECK: (XX)**
   00 - None
   EN - Extended Neck

6. **VOLUME ADJUSTMENT: (XX)**
   00 - None
   VA - Volume Control

7. **FUSIBLE LINK: (XX)**
   00 - 212°F Fusible Link (Standard)
   FL - 165°F Fusible Link

8. **FINISH: (XXX)**
   WHT - White
   ALP - Aluminum Paint
   CMP - Alkyd Enamel Paint to Match
   CMX - Hard Coat Urethane to Match
   OWH - Off-White Paint
   BLK - Black Paint

See dimensional data for available panel and neck configurations.

SAMPLE CONFIGURATION: 14SCAFR - 6” - LTF - 24X24 - 00 - 00 - 00 - WHT

© Copyright Krueger 2024