DIMENSIONAL DATA | 14SCAFR (FIRE RATED)

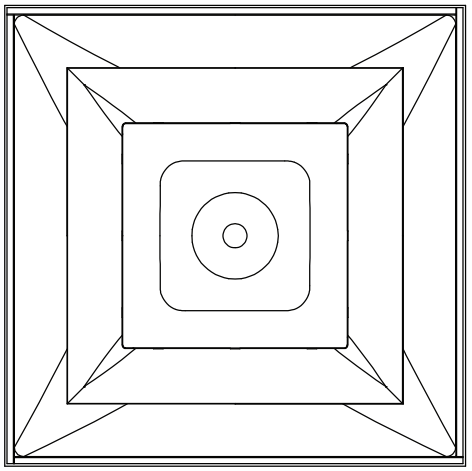

FACE VIEW

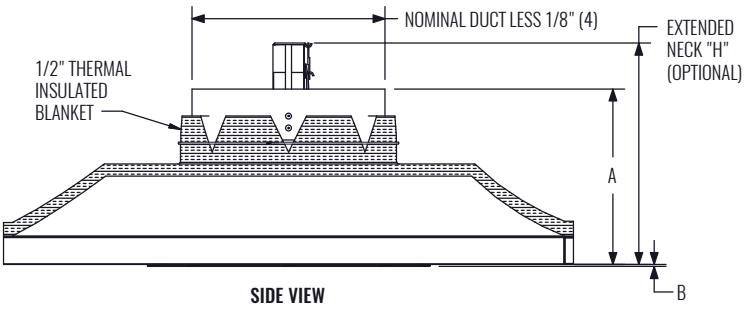

SIDE VIEW

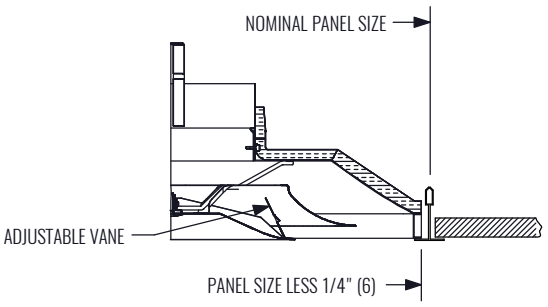

FRAME LTF (LAY-IN)

PANEL SIZE	NOMINAL DUCT	A	B	H
12"x12"	6", 7"	5 7/8"(149)	3/8" (10)	8 7/8" (225)
	8"	5 3/4"(146)	5/8"(16)	8 3/4" (222)
24"x24"	8"	7 5/8"(194)	1/4" (6)	10 5/8" (270)
	10"	7 3/4" (197)		10 5/8" (270)
	12", 14"			10 3/4" (273)
	15"			15 3/4" (400)

NOTES: Dimensions in parentheses are millimeters.

© Copyright Krueger 2024