14SC/514SC SERIES

Diffuser | Louvered Face

KRUEGER

INTRODUCTION

The 14SC series are square face, 3-cone, round neck ceiling diffusers and are available in a variety of frame styles to help meet the architectural requirements of today's ceilings. The spacing of the inner cones in relation to the backpan result in a design possessing anti-smudge characteristics, preventing the buildup of particles on the ceiling, which is achieved by minimizing the low pressure region inherent to most 4-way directional blow diffusers. Also known as concentric cone diffusers, 14SCs are constructed of one-piece stamped cones which provide a clean, smooth appearance without mitered corner joints. The 14SC series delivers strong performance in variable air volume systems. The consistent, horizontal airflow ensures efficient air distribution throughout the space, even as the airflow rate changes across a wide range.

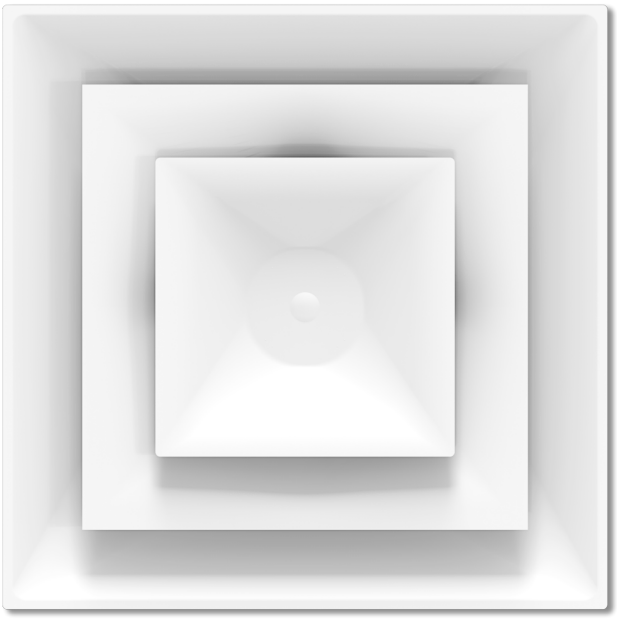

MODELS

14SC - Steel, 3-Cone, Louvered Diffuser
14SCFR - Steel, 3-Cone, Fire Rated, Louvered Diffuser
514SC - Aluminum, 3-Cone, Louvered Diffuser



PANEL SIZES

- 12"x12", 20"x20", and 24"x24"
- 300x300mm and 600x600mm

FEATURES

- Three cones for optimum airflow control
- Great choice for variable air volume spaces
- Cones feature a one-piece stamped construction without mitered joints
- Round neck for easy connection to round duct
- Anti-smudge design prevents smeared ceilings

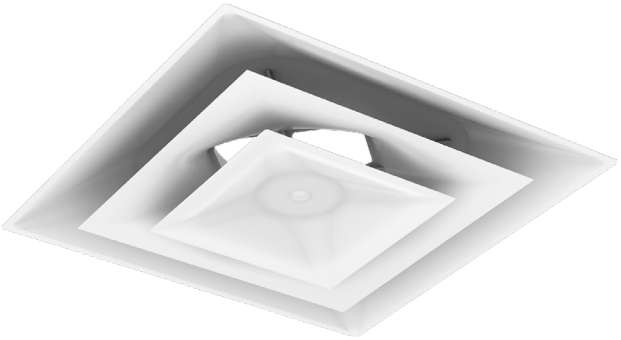

ACCESSORIES

- Optional round damper: radial, opposed blade, or butterfly
- Optional R6 insulated backpan
- Optional straightening grid
- Optional surface mounting frame
- Optional 30"x30" lay-in adapter frame
- Optional earthquake tabs



FINISHES

- Standard finish is #WHT White
- Optional finishes available

© Copyright Krueger 2024

DIMENSIONAL DATA | 14SCFR (FIRE RATED)

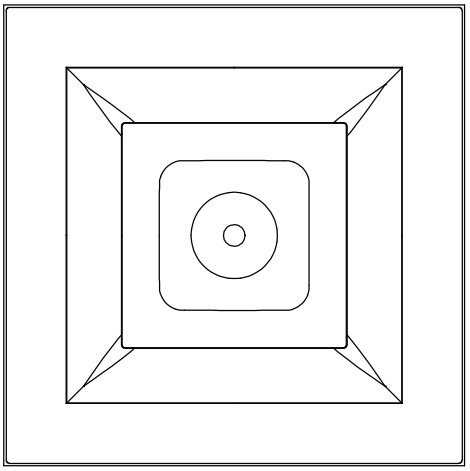

FACE VIEW

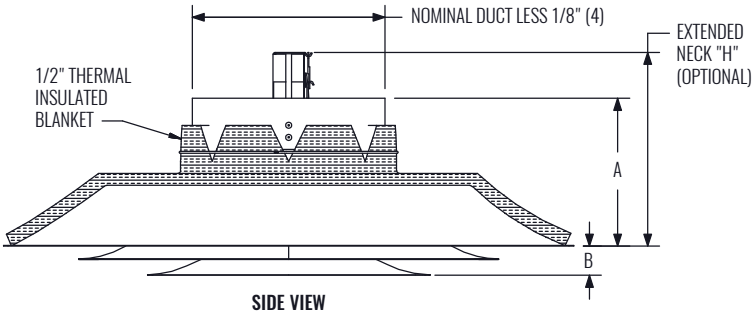

SIDE VIEW

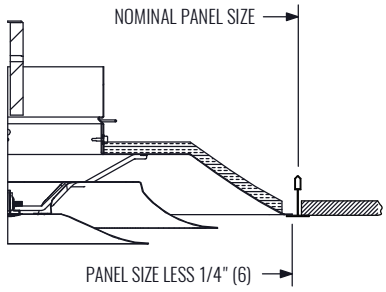

FRAME LTF (LAY-IN)

PANEL SIZE	NOMINAL DUCT	A	B	H
12"x12"	6", 7"	5" (127)	1 1/8" (29)	8 1/8" (206)
	8"	5 1/4" (133)		8 3/8" (213)
24"x24"	8", 10", 12", 14"	6 1/8" (156)	1 1/4" (32)	9 1/4" (235)
	15"			14 1/4" (362)

NOTES: Dimensions in parentheses are millimeters.

© Copyright Krueger 2024

PERFORMANCE DATA | 12”x12” MODULE, NO DAMPER

NECK SIZE	IP DATA					NC	METRIC DATA				
	NECK VEL	AIR FLOW	Pt	Ps	THROW		NECK VEL	AIR FLOW	Pt	Ps	THROW
	FPM	CFM	"WG	"WG	ft		m/s	L/s	Pa	Pa	m
4" DIA.	400	35	.002	0.012	1 - 1 - 3	-	2.03	17	0.5	3.0	0.3 - 0.3 - 0.9
	500	44	.002	0.018	1 - 2 - 4	-	2.54	21	0.5	4.5	0.3 - 0.6 - 1.2
	600	52	.004	0.026	1 - 2 - 4	-	3.05	25	1.0	6.5	0.3 - 0.6 - 1.2
	700	61	.004	0.035	2 - 3 - 5	-	3.56	29	1.0	8.7	0.6 - 0.9 - 1.5
	800	70	.006	0.046	2 - 3 - 6	12	4.06	33	1.5	11.5	0.6 - 0.9 - 1.8
	1000	87	.010	0.072	2 - 4 - 7	20	5.08	41	2.5	17.9	0.6 - 1.2 - 2.1
	1200	105	.014	0.104	3 - 4 - 7	26	6.10	50	3.5	25.9	0.9 - 1.2 - 2.1
	1400	122	.019	0.141	3 - 5 - 8	31	7.11	58	4.7	35.1	0.9 - 1.5 - 2.4
	1600	140	.024	0.184	4 - 6 - 8	36	8.13	66	6.0	45.8	1.2 - 1.8 - 2.4
5" DIA.	400	55	.005	0.015	1 - 2 - 4	-	2.03	26	1.2	3.7	0.3 - 0.6 - 1.2
	500	68	.007	0.023	2 - 2 - 5	-	2.54	32	1.7	5.7	0.6 - 0.6 - 1.5
	600	82	.011	0.033	2 - 3 - 6	-	3.05	39	2.7	8.2	0.6 - 0.9 - 1.8
	700	95	.013	0.044	2 - 3 - 7	-	3.56	45	3.2	11.0	0.6 - 0.9 - 2.1
	800	109	.018	0.058	2 - 4 - 7	15	4.06	51	4.5	14.4	0.6 - 1.2 - 2.1
	1000	136	.029	0.091	3 - 5 - 8	23	5.08	64	7.2	22.7	0.9 - 1.5 - 2.4
	1200	164	.041	0.131	4 - 6 - 9	29	6.10	77	10.2	32.6	1.2 - 1.8 - 2.7
	1400	191	.056	0.178	4 - 7 - 10	34	7.11	90	13.9	44.3	1.2 - 2.1 - 3.0
	1600	218	.072	0.232	5 - 7 - 10	39	8.13	103	17.9	57.8	1.5 - 2.1 - 3.0
6" DIA.	400	79	.008	0.018	2 - 2 - 5	-	2.03	37	2.0	4.5	0.6 - 0.6 - 1.5
	500	98	.012	0.028	2 - 3 - 6	-	2.54	46	3.0	7.0	0.6 - 0.9 - 1.8
	600	118	.019	0.041	2 - 3 - 7	-	3.05	56	4.7	10.2	0.6 - 0.9 - 2.1
	700	137	.025	0.056	3 - 4 - 8	13	3.56	65	6.2	13.9	0.9 - 1.2 - 2.4
	800	157	.033	0.073	3 - 5 - 9	18	4.06	74	8.2	18.2	0.9 - 1.5 - 2.7
	1000	196	.052	0.114	4 - 6 - 10	25	5.08	93	12.9	28.4	1.2 - 1.8 - 3.0
	1200	236	.074	0.164	5 - 7 - 11	32	6.10	111	18.4	40.8	1.5 - 2.1 - 3.4
	1400	275	.101	0.223	5 - 8 - 12	37	7.11	130	25.1	55.5	1.5 - 2.4 - 3.7
	1600	314	.131	0.291	6 - 9 - 13	42	8.13	148	32.6	72.5	1.8 - 2.7 - 4.0
7" DIA.	400	107	.010	0.020	2 - 3 - 5	-	2.03	50	2.5	5.0	0.6 - 0.9 - 1.5
	500	134	.015	0.031	2 - 3 - 7	-	2.54	63	3.7	7.7	0.6 - 0.9 - 2.1
	600	160	.023	0.045	3 - 4 - 8	-	3.05	76	5.7	11.2	0.9 - 1.2 - 2.4
	700	187	.031	0.062	3 - 5 - 9	15	3.56	88	7.7	15.4	0.9 - 1.5 - 2.7
	800	214	.041	0.081	4 - 5 - 10	20	4.06	101	10.2	20.2	1.2 - 1.5 - 3.0
	1000	267	.064	0.126	4 - 7 - 12	28	5.08	126	15.9	31.4	1.2 - 2.1 - 3.7
	1200	321	.091	0.181	5 - 8 - 13	34	6.10	151	22.7	45.1	1.5 - 2.4 - 4.0
	1400	374	.125	0.247	6 - 9 - 14	39	7.11	177	31.1	61.5	1.8 - 2.7 - 4.3
	1600	428	.162	0.322	7 - 10 - 15	44	8.13	202	40.3	80.2	2.1 - 3.0 - 4.6
8" DIA.	400	140	.012	0.022	2 - 3 - 6	-	2.03	66	3.0	5.5	0.6 - 0.9 - 1.8
	500	175	.019	0.035	3 - 4 - 8	-	2.54	82	4.7	8.7	0.9 - 1.2 - 2.4
	600	209	.028	0.050	3 - 5 - 9	12	3.05	99	7.0	12.5	0.9 - 1.5 - 2.7
	700	244	.038	0.069	4 - 5 - 11	17	3.56	115	9.5	17.2	1.2 - 1.5 - 3.4
	800	279	.050	0.090	4 - 6 - 12	22	4.06	132	12.5	22.4	1.2 - 1.8 - 3.7
	1000	349	.078	0.140	5 - 8 - 13	29	5.08	165	19.4	34.9	1.5 - 2.4 - 4.0
	1200	419	.112	0.202	6 - 9 - 14	36	6.10	198	27.9	50.3	1.8 - 2.7 - 4.3
	1400	489	.153	0.275	7 - 11 - 16	41	7.11	231	38.1	68.5	2.1 - 3.4 - 4.9
	1600	559	.199	0.359	8 - 12 - 17	46	8.13	264	49.6	89.4	2.4 - 3.7 - 5.2

NOTES: Throw values are given for isothermal conditions and terminal velocities of 150, 100, and 50 FPM (0.75, 0.50, and 0.25 m/s). NC values are based on octave band 2 - 7 sound power levels minus a room absorption of 10dB, re 10^{-12} Watts. Dash in space denotes a NC or dB value of less than 10. Data was obtained from tests conducted in accordance with ANSI/ASHRAE Standard 70, ISO Standard 5219, and ISO Standard 3741. See Krueger’s selection software for performance data not shown.

© Copyright Krueger 2024

PERFORMANCE DATA | 20”x20” MODULE, NO DAMPER

NECK SIZE	IP DATA					NC	METRIC DATA				
	NECK VEL	AIR FLOW	Pt	Ps	THROW		NECK VEL	AIR FLOW	Pt	Ps	THROW
	FPM	CFM	"WG	"WG	ft		m/s	L/s	Pa	Pa	m
6” DIA.	400	79	.006	0.016	1 - 1 - 4	-	2.03	37	1.5	4.0	0.3 - 0.3 - 1.2
	500	98	.009	0.025	1 - 2 - 4	-	2.54	46	2.2	6.2	0.3 - 0.6 - 1.2
	600	118	.013	0.035	2 - 3 - 5	-	3.05	56	3.2	8.7	0.6 - 0.9 - 1.5
	700	137	.017	0.048	2 - 3 - 6	14	3.56	65	4.2	12.0	0.6 - 0.9 - 1.8
	800	157	.023	0.063	2 - 4 - 7	18	4.06	74	5.7	15.7	0.6 - 1.2 - 2.1
	1000	196	.037	0.099	3 - 4 - 9	24	5.08	93	9.2	24.7	0.9 - 1.2 - 2.7
	1200	236	.052	0.142	4 - 5 - 10	30	6.10	111	12.9	35.4	1.2 - 1.5 - 3.0
	1400	275	.071	0.193	4 - 6 - 12	34	7.11	130	17.7	48.1	1.2 - 1.8 - 3.7
8” DIA.	400	140	.007	0.017	1 - 1 - 4	-	2.03	66	1.7	4.2	0.3 - 0.3 - 1.2
	500	175	.011	0.027	1 - 2 - 4	-	2.54	82	2.7	6.7	0.3 - 0.6 - 1.2
	600	209	.016	0.038	2 - 3 - 5	-	3.05	99	4.0	9.5	0.6 - 0.9 - 1.5
	700	244	.026	0.057	2 - 3 - 6	13	3.56	115	6.5	14.2	0.6 - 0.9 - 1.8
	800	279	.027	0.067	2 - 4 - 7	19	4.06	132	6.7	16.7	0.6 - 1.2 - 2.1
	1000	349	.043	0.105	3 - 4 - 9	23	5.08	165	10.7	26.1	0.9 - 1.2 - 2.7
	1200	419	.062	0.152	4 - 5 - 10	29	6.10	198	15.4	37.8	1.2 - 1.5 - 3.0
	1400	489	.085	0.207	4 - 6 - 12	34	7.11	231	21.2	51.5	1.2 - 1.8 - 3.7
10” DIA.	400	218	.010	0.020	1 - 1 - 4	-	2.03	103	2.5	5.0	0.3 - 0.3 - 1.2
	500	273	.016	0.032	1 - 2 - 4	-	2.54	129	4.0	8.0	0.3 - 0.6 - 1.2
	600	327	.023	0.045	2 - 3 - 5	17	3.05	154	5.7	11.2	0.6 - 0.9 - 1.5
	700	382	.031	0.062	2 - 3 - 6	20	3.56	180	7.7	15.4	0.6 - 0.9 - 1.8
	800	436	.041	0.081	2 - 4 - 7	24	4.06	206	10.2	20.2	0.6 - 1.2 - 2.1
	1000	545	.064	0.126	3 - 4 - 9	31	5.08	257	15.9	31.4	0.9 - 1.2 - 2.7
	1200	654	.090	0.180	4 - 5 - 10	36	6.10	309	22.4	44.8	1.2 - 1.5 - 3.0
	1400	764	.118	0.240	4 - 6 - 12	41	7.11	361	29.4	59.8	1.2 - 1.8 - 3.7

NOTES: Throw values are given for isothermal conditions and terminal velocities of 150, 100, and 50 FPM (0.75, 0.50, and 0.25 m/s). NC values are based on octave band 2 - 7 sound power levels minus a room absorption of 10dB, re 10^{-12} Watts. Dash in space denotes a NC or dB value of less than 10. Data was obtained from tests conducted in accordance with ANSI/ASHRAE Standard 70, ISO Standard 5219, and ISO Standard 3741. See Krueger’s selection software for performance data not shown.

© Copyright Krueger 2024

PERFORMANCE DATA | 24”x24” MODULE, NO DAMPER

NECK SIZE	IP DATA					NC	METRIC DATA				
	NECK VEL	AIR FLOW	Pt	Ps	THROW		NECK VEL	AIR FLOW	Pt	Ps	THROW
	FPM	CFM	"WG	"WG	ft		m/s	L/s	Pa	Pa	m
6” DIA.	400	79	.006	0.016	1 - 2 - 4	-	2.03	37	1.5	4.0	0.3 - 0.6 - 1.2
	500	98	.009	0.025	1 - 2 - 4	-	2.54	46	2.2	6.2	0.3 - 0.6 - 1.2
	600	118	.013	0.035	2 - 3 - 5	-	3.05	56	3.2	8.7	0.6 - 0.9 - 1.5
	700	137	.017	0.048	2 - 3 - 6	12	3.56	65	4.2	12.0	0.6 - 0.9 - 1.8
	800	157	.023	0.063	2 - 4 - 7	16	4.06	74	5.7	15.7	0.6 - 1.2 - 2.1
	1000	196	.037	0.099	3 - 4 - 9	22	5.08	93	9.2	24.7	0.9 - 1.2 - 2.7
	1200	236	.052	0.142	4 - 5 - 11	28	6.10	111	12.9	35.4	1.2 - 1.5 - 3.4
	1400	275	.071	0.193	4 - 6 - 12	32	7.11	130	17.7	48.1	1.2 - 1.8 - 3.7
	1600	314	.092	0.252	5 - 7 - 13	36	8.13	148	22.9	62.7	1.5 - 2.1 - 4.0
8” DIA.	400	140	.006	0.016	2 - 3 - 5	-	2.03	66	1.5	4.0	0.6 - 0.9 - 1.5
	500	175	.009	0.025	2 - 3 - 7	-	2.54	82	2.2	6.2	0.6 - 0.9 - 2.1
	600	209	.014	0.036	3 - 4 - 8	11	3.05	99	3.5	9.0	0.9 - 1.2 - 2.4
	700	244	.018	0.049	3 - 5 - 9	15	3.56	115	4.5	12.2	0.9 - 1.5 - 2.7
	800	279	.024	0.064	4 - 5 - 11	19	4.06	132	6.0	15.9	1.2 - 1.5 - 3.4
	1000	349	.039	0.101	4 - 7 - 13	26	5.08	165	9.7	25.1	1.2 - 2.1 - 4.0
	1200	419	.055	0.145	5 - 8 - 14	31	6.10	198	13.7	36.1	1.5 - 2.4 - 4.3
	1400	489	.075	0.197	6 - 9 - 16	36	7.11	231	18.7	49.1	1.8 - 2.7 - 4.9
	1600	559	.097	0.257	7 - 11 - 17	40	8.13	264	24.2	64.0	2.1 - 3.4 - 5.2
10” DIA.	400	218	.007	0.017	2 - 4 - 7	-	2.03	103	1.7	4.2	0.6 - 1.2 - 2.1
	500	273	.010	0.026	3 - 5 - 9	-	2.54	129	2.5	6.5	0.9 - 1.5 - 2.7
	600	327	.015	0.037	4 - 5 - 11	14	3.05	154	3.7	9.2	1.2 - 1.5 - 3.4
	700	382	.020	0.051	4 - 6 - 13	18	3.56	180	5.0	12.7	1.2 - 1.8 - 4.0
	800	436	.026	0.066	5 - 7 - 14	22	4.06	206	6.5	16.4	1.5 - 2.1 - 4.3
	1000	545	.041	0.103	6 - 9 - 17	29	5.08	257	10.2	25.6	1.8 - 2.7 - 5.2
	1200	654	.059	0.149	7 - 11 - 18	34	6.10	309	14.7	37.1	2.1 - 3.4 - 5.5
	1400	764	.080	0.202	8 - 13 - 20	39	7.11	361	19.9	50.3	2.4 - 4.0 - 6.1
	1600	873	.104	0.264	10 - 14 - 21	43	8.13	412	25.9	65.7	3.0 - 4.3 - 6.4
12” DIA.	400	314	.007	0.017	3 - 5 - 9	-	2.03	148	1.7	4.2	0.9 - 1.5 - 2.7
	500	393	.011	0.027	4 - 6 - 11	11	2.54	185	2.7	6.7	1.2 - 1.8 - 3.4
	600	471	.016	0.038	5 - 7 - 14	16	3.05	222	4.0	9.5	1.5 - 2.1 - 4.3
	700	550	.021	0.052	5 - 8 - 16	21	3.56	260	5.2	12.9	1.5 - 2.4 - 4.9
	800	628	.028	0.068	6 - 9 - 18	24	4.06	296	7.0	16.9	1.8 - 2.7 - 5.5
	1000	785	.044	0.106	8 - 11 - 20	31	5.08	370	11.0	26.4	2.4 - 3.4 - 6.1
	1200	942	.063	0.153	9 - 14 - 22	36	6.10	445	15.7	38.1	2.7 - 4.3 - 6.7
	1400	1100	.086	0.208	11 - 16 - 23	41	7.11	519	21.4	51.8	3.4 - 4.9 - 7.0
	1600	1257	.112	0.272	12 - 18 - 25	45	8.13	593	27.9	67.7	3.7 - 5.5 - 7.6
14” DIA.	400	428	.008	0.018	4 - 5 - 11	-	2.03	202	2.0	4.5	1.2 - 1.5 - 3.4
	500	535	.012	0.028	5 - 7 - 14	13	2.54	252	3.0	7.0	1.5 - 2.1 - 4.3
	600	641	.018	0.040	5 - 8 - 16	18	3.05	303	4.5	10.0	1.5 - 2.4 - 4.9
	700	748	.023	0.054	6 - 10 - 19	22	3.56	353	5.7	13.4	1.8 - 3.0 - 5.8
	800	855	.047	0.087	7 - 11 - 21	26	4.06	404	11.7	21.7	2.1 - 3.4 - 6.4
	1000	1069	.048	0.110	9 - 14 - 23	33	5.08	505	12.0	27.4	2.7 - 4.3 - 7.0
	1200	1283	.069	0.159	11 - 16 - 25	38	6.10	606	17.2	39.6	3.4 - 4.9 - 7.6
	1400	1497	.094	0.216	13 - 19 - 27	43	7.11	707	23.4	53.8	4.0 - 5.8 - 8.2
	1600	1710	.122	0.282	14 - 21 - 29	47	8.13	807	30.4	70.2	4.3 - 6.4 - 8.8
15” DIA.	400	491	.008	0.018	4 - 6 - 12	-	2.03	232	2.0	4.5	1.2 - 1.8 - 3.7
	500	614	.012	0.028	5 - 7 - 15	13	2.54	290	3.0	7.0	1.5 - 2.1 - 4.6
	600	736	.018	0.040	6 - 9 - 18	19	3.05	347	4.5	10.0	1.8 - 2.7 - 5.5
	700	859	.024	0.055	7 - 10 - 21	23	3.56	405	6.0	13.7	2.1 - 3.0 - 6.4
	800	982	.032	0.072	8 - 12 - 22	27	4.06	463	8.0	17.9	2.4 - 3.7 - 6.7
	1000	1227	.050	0.112	10 - 15 - 25	34	5.08	579	12.5	27.9	3.0 - 4.6 - 7.6
	1200	1473	.072	0.162	12 - 18 - 27	39	6.10	695	17.9	40.3	3.7 - 5.5 - 8.2
	1400	1718	.098	0.220	14 - 21 - 29	44	7.11	811	24.4	54.8	4.3 - 6.4 - 8.8
	1600	1963	.127	0.287	16 - 22 - 31	48	8.13	926	31.6	71.5	4.9 - 6.7 - 9.4

NOTES: Throw values are given for isothermal conditions and terminal velocities of 150, 100, and 50 FPM (0.75, 0.50, and 0.25 m/s). NC values are based on octave band 2 - 7 sound power levels minus a room absorption of 10dB, re 10^{-12} Watts. Dash in space denotes a NC or dB value of less than 10. Data was obtained from tests conducted in accordance with ANSI/ASHRAE Standard 70, ISO Standard 5219, and ISO Standard 3741. See Krueger’s selection software for performance data not shown.

© Copyright Krueger 2024

14SC/514SC SERIES

Diffuser | Louvered Face

KRUEGER

ENGINEERING SPECIFICATION & CONFIGURATION

14SCFR

The drop cone, square face diffuser shall be Krueger model 14SCFR (steel). The diffuser must be UL classified fire rated ceiling diffuser assembly listed in Underwriters Laboratories Fire Resistance Directory. The diffuser shall be tested in accordance with UL 263 and must meet NFPA 90 requirements. The diffuser must be able to operate in three-hour fire rated, exposed grid suspended ceiling. The 14SCFR model shall be constructed of three precision die-stamped cones. The back cone shall have an integrally drawn neck for duct connections. Welded-in inlets and corner joints are not acceptable. The two inner cones shall be constructed as a single, removable inner cone assembly for easy installation and cleaning. The inner cone assembly must have a hole with removable plug in the center to allow quick adjustment of an optional inlet damper without removing the inner cone assembly. Diffusers shall be constructed of 22-gauge steel. The thermal protection blanket shall not contain asbestos.

Optional volume adjustment damper shall be constructed of heavy gauge steel. Damper must be operable from the face of the diffuser. Optional sectorizing baffles shall be available to restrict the discharge air in certain directions.

PERFORMANCE

The manufacturer shall provide published (printed or electronic) performance data for the diffuser. Performance data shall include 2 - 7 octave band sound power levels. The diffuser shall be tested in accordance to the data standards at the time of product introduction or ANSI/ASHRAE Standard 70.

FINISH

The paint finish shall be #44 British White and be an anodic acrylic paint, baked at 315˚ for 30 minutes. The paint thickness shall be 0.8 - 1.0 mils, gloss at 60˚ per ASTM D523-89 of 50 - 85%, pencil hardness per ASTM D3363-92A of HB - H, crosshatch adhesion per ASTM D3359-83 of 4B - 5B, impact per ASTM D2794-93 of direct impact >100 in/lb and reverse impact >80 in/lb, salt spray per ASTM B117-9048 of 96 hours, humidity per ASTM D2247-92 of >500 hours and water soak per ASTM D870-92 of 250 hours.

1. **SERIES: (XXXXXXX)**
   14SCFR - Steel, 3-Cone, Fire Rated Diffuser

2. **ROUND NECK: (XX)**
   6", 7", 8", 10", 12", 14", or 15"

3. **FRAME: (XXX)**
   LTF - Lay-in T-Bar

4. **PANEL: (XX)x(XX)**
   12x12 - 12"x12"
   24x24 - 24"x24"

5. **EXTENDED NECK: (XX)**
   00 - None
   EN - Extended Neck

6. **VOLUME ADJUSTMENT: (XX)**
   00 - None
   VA - Volume Control

7. **FUSIBLE LINK: (XX)**
   00 - 212°F Fusible Link (Standard)
   FL - 165°F Fusible Link

8. **FINISH: (XXX)**
   WHT - White
   ALP - Aluminum Paint
   CMP - Alkyd Enamel Paint to Match
   CMX - Hard Coat Urethane to Match
   OWH - Off-White Paint
   BLK - Black Paint

See dimensional data for available panel and neck configurations.

SAMPLE CONFIGURATION: 14SCFR - 6" - LTF - 24X24 - 00 - 00 - 00 - WHT

© Copyright Krueger 2024