KRUEGER

14SCFR SERIES

SQUARE 3 CONE, UL FIRE RATED DIFFUSER

JOB NAME _____
ENGINEER _____
CONTRACTOR _____
TAG _____

SUBMITTAL SHEET

LTF, 24x24 FACE VIEW

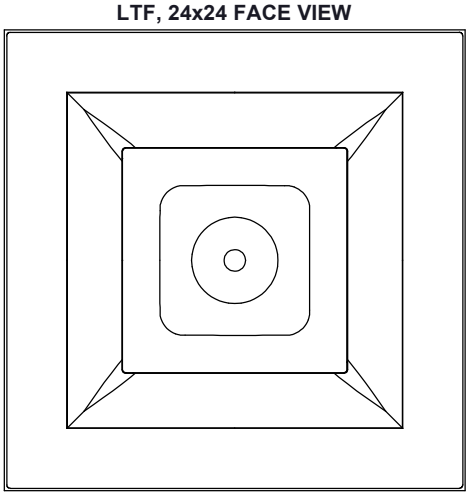

☐ **LTF (LAY-IN)**

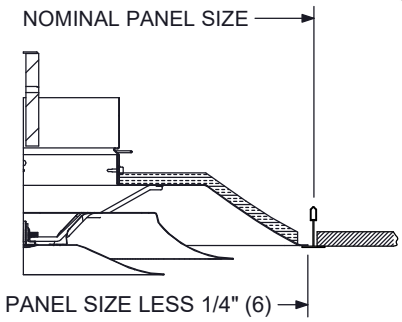

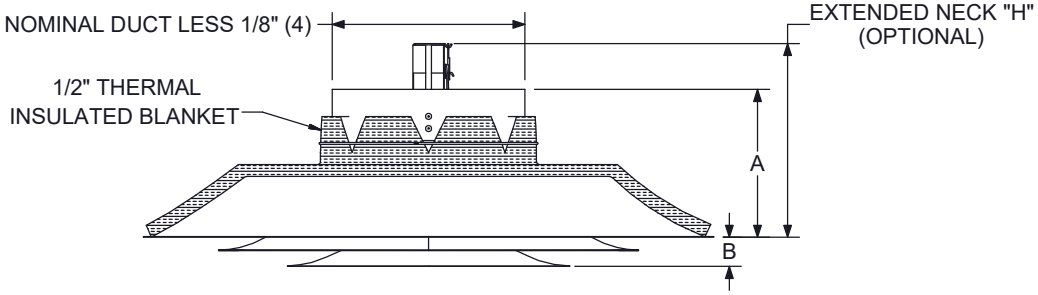

PANEL SIZE	NOMINAL DUCT	A	B	H
12 X 12	6, 7	5 (127)	1 1/8 (29)	8 1/8 (206)
12 X 12	8	5 1/4 (133)		8 3/8 (213)
24 X 24	8, 10, 12, 14	6 1/8 (156)	1 1/4 (32)	9 1/4 (235)
24 X 24	15			14 1/4 (362)

NOTES:

1. **14SCFR** IS STEEL CONSTRUCTION.
2. **14SCFR** IS UL CLASSIFIED FIRE RATED DIFFUSER, TESTED IN ACCORDANCE WITH UL 263.
3. **14SCFR** HAS A FIRE RESISTANCE RATING OF 3 HOURS OR LESS
4. **14SCFR** ONLY AVAILABLE IN FRAME **LTF**.
5. **212° F** FUSIBLE LINK COMES STANDARD.
6. STANDARD FINISH IS **WHT**- BRITISH WHITE. OPTIONAL FINISHES AVAILABLE.

ACCESSORIES: *ACCESSORIES MAY SHIP SEPARATELY*

- ☐ **EN** - EXTENDED NECK
- ☐ **VA** - FUSIBLE VOLUME ADJUSTMENT CONTROL
- ☐ **FL** - 165° F FUSIBLE LINK

DIMENSIONS ARE GIVEN AS INCHES (MM)