KRUEGER
Excellence in Air Distribution

JOB NAME _____
ENGINEER _____
CONTRACTOR _____
TAG _____

KLPS Unit 3

Hot Water Heat with Electronic Controls

SUBMITTAL SHEET

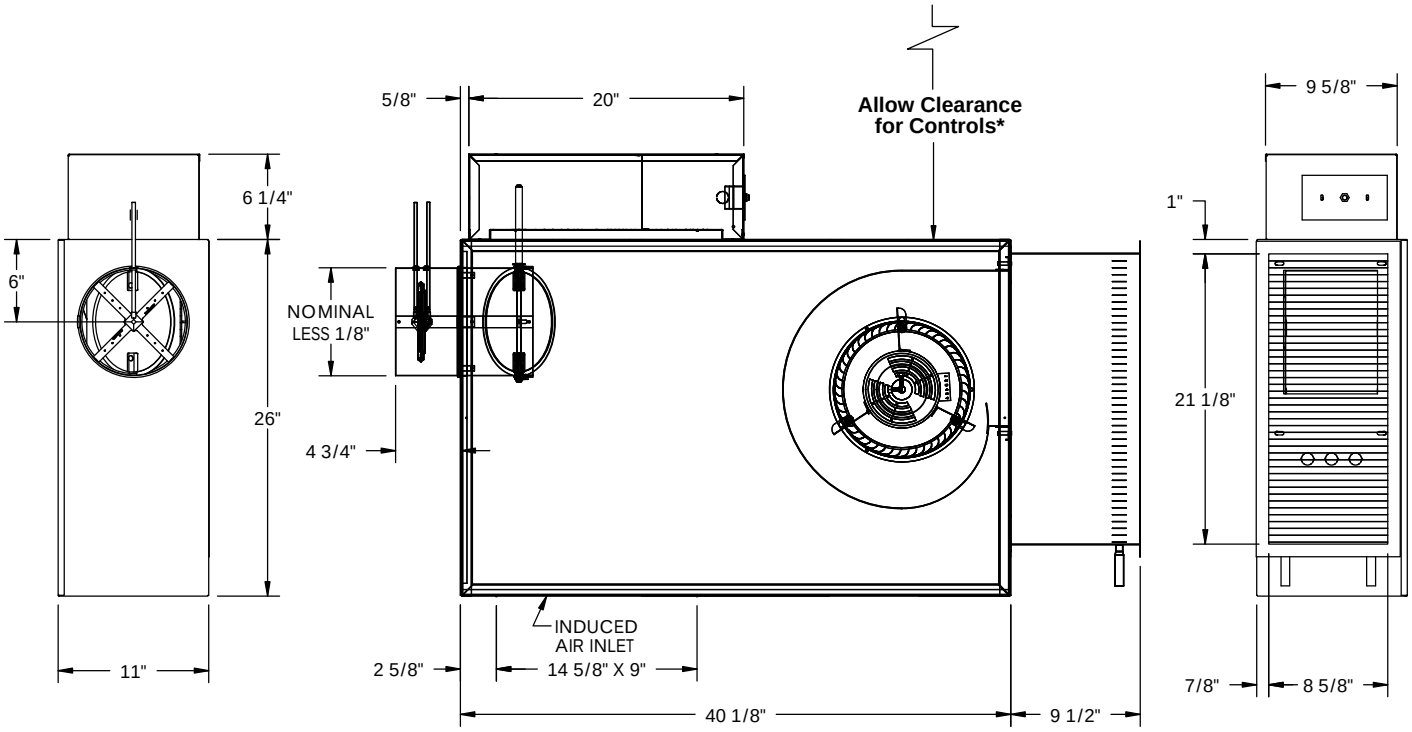

Unit Size	Inlet Size
3	08"
3	10"

INLET VIEW

PLAN VIEW - LEFT HAND UNIT
(Right Hand Coil Connection Shown)

DISCHARGE VIEW

STANDARD FEATURES:

- 20GA. Galvanized Steel Construction
- Steel Control Enclosure for Electronic Components
- 1/2'' Thick Dual Density Fiberglass Insulation Meeting NFPA 90A and UL181 Safety Requirements
- 1/4 HP Single Speed, Single Phase, Permanently Lubricated PSC Motor
  ☐ 120V ☐ 208/240V ☐ 277V
- Field Adjustable Speed Controller
- Bottom Access Panel for Service
- 4 Quadrant, Center Averaging Inlet Flow Sensor
- Factory Supplied 24 Volt Control Transformer for Electronic Controls
- ETL Listed
- Performance Data per AHRI Standard 880
- Variety of Direct Digital or Analog Electronic Control Packages Available

* Check NEC for Unit Clearance Requirements

OPTIONAL FEATURES:

☐ 1/3 HP ECM Motor with Permanently Lubricated Ball Bearings and Constant Airflow Program.
- ☐ Manual Control ☐ 0-10Vdc Remote Control
- ☐ 2-10Vdc Remote Control
- ☐ 120V ☐ 208/240V ☐ 277V

➢ Liners
- ☐ 1/2'' Cellular Insulation ☐ No Liner
- ☐ 1/2'' Foil Encapsulated Fiberglass Insulation
- ☐ Solid Metal Liner with 1/2'' Dual Density Fiberglass
- ☐ Perforated Metal Liner with 1/2'' Dual Density Fiberglass

➢ Coil Connections
- ☐ Left Hand ☐ Right Hand

☐ Construction Type Air Filter – 17'' x 11'' x 1''
☐ Merv Type 8 Air Filter – 17'' x 11'' x 1''
☐ Linear Averaging Inlet Flow Sensor
☐ Left Hand Controls ☐ Right Hand Controls
☐ Motor Toggle Disconnect Switch ☐ Motor Fusing
☐ Dust Tight Control Enclosure
☐ Hanger Brackets
☐ Dual Access Panels for Service
- ☐ Cam-Locks (Dual Access Panel Only)