KRUEGER
Excellence in Air Distribution

KQFS-FA Unit Size 5, 6, and 7

Electric Heat with Electronic Controls

JOB NAME _____
ENGINEER _____
CONTRACTOR _____
TAG _____

SUBMITTAL SHEET

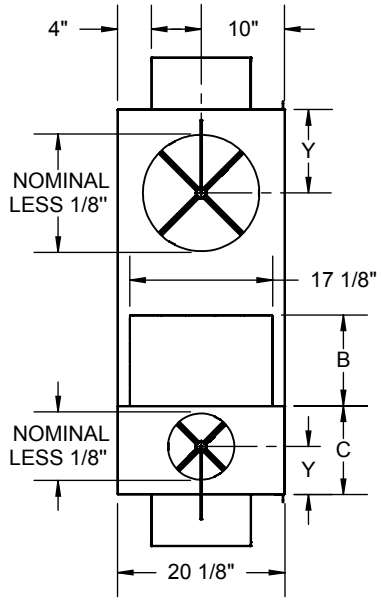

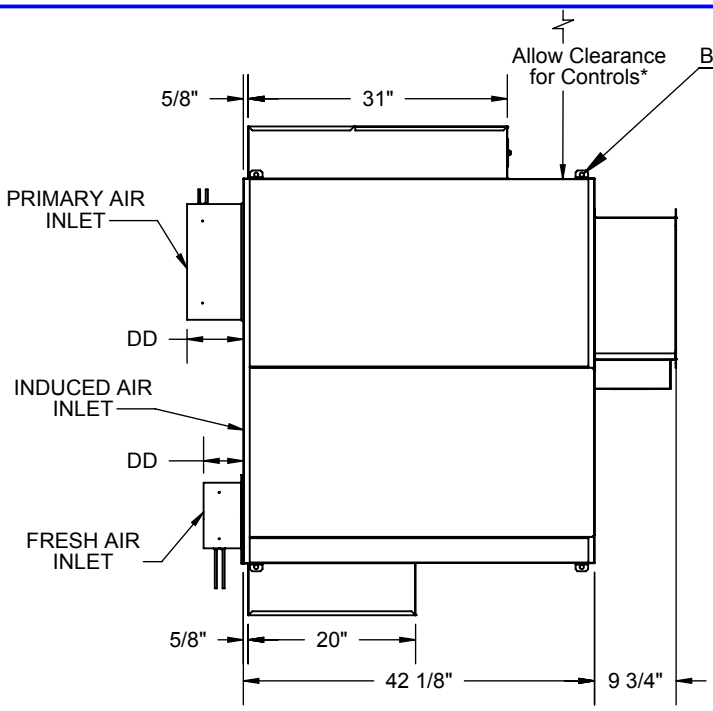

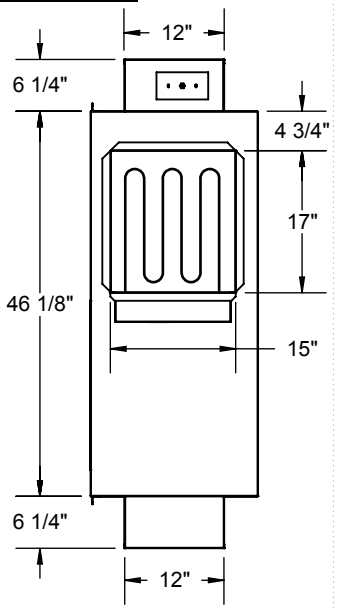

Unit Size	Primary Air		
	Inlet Size	Y	DD
5, 6, 7	10"	7"	4 7/8"
5, 6, 7	12"	7"	6 7/8"
5, 6, 7	14"	10"	6 7/8"
6, 7	16"	10"	6 7/8"

INLET VIEW

Fresh Air				
Inlet Size	Y	DD	B	C
6"	6"	4 7/8"	12 7/8"	8 7/8"
7"	7"	4 7/8"	11 7/8"	9 7/8"
8"	6"	4 7/8"	10 7/8"	10 7/8"

PLAN VIEW - LEFT HAND UNIT**

Unit Size	Motor HP	
	PSC	ECM
5	1/2 HP	-
6	3/4 HP	1 HP
7	1 HP	1 HP

DISCHARGE VIEW

STANDARD FEATURES:

- 20GA. Galvanized Steel Construction
- Steel Control Enclosures for Electronic Components
- 1/2" Thick Dual Density Fiberglass Insulation Meeting NFPA 90A and UL181 safety Requirements
- Single Speed, Single Phase, Permanently Lubricated PSC Motor
  ☐ 120V ☐ 208/240V ☐ 277V
- Field Adjustable Fan Speed Control
- Bottom Access Panel for Service
- Integral Induced Air Attenuator
- 4 Quadrant, Center Averaging Inlet Flow Sensor
- Factory Supplied 24 Volt Control Transformer for Electronic Controls
- ETL listed
- Performance Data per AHRI Standard 880

* Check NEC for Unit Clearance Requirements
** Primary Inlet Location Determines Orientation of Unit

OPTIONAL FEATURES:

☐ ECM Motor with Permanently Lubricated Ball Bearings and Constant Airflow Program. (Unit Size 6 & 7)
  ☐ Manual Control ☐ 0-10Vdc Remote Control
  ☐ 2-10Vdc Remote Control
  ☐ 120V ☐ 208/240V ☐ 277V
➢ Liners
  ☐ 1/2" Cellular Insulation ☐ No Liner
  ☐ 1" Cellular Insulation
  ☐ 1" Dual Density Fiberglass Insulation
  ☐ 13/16" Steriliner Duct Board Insulation
  ☐ Solid Metal Liner with 1/2" Dual Density Fiberglass
  ☐ 1/2" Foil Encapsulated Fiberglass Insulation
  ☐ 1" Foil Encapsulated Fiberglass Insulation
  ☐ Perforated Metal Liner with 1/2" Dual Density Fiberglass
☐ Linear Averaging Inlet Flow Sensor
☐ LineaHeat Controlled SSR Heat
  ☐ Discharge Temperature Sensor
☐ 24VAC SSR Heat ☐ Manual Reset Cutoff
☐ Cam Lock Bottom Access ☐ Motor Fusing
☐ Dust Tight Control Enclosure ☐ Chicago Code
☐ Left Hand Controls ☐ Right Hand Controls
➢ Door Interlocking Disconnect Switch
  ☐ Fused ☐ Non-Fused
☐ Construction Type Air Filter – 14" x 19" x 1"
☐ Hanger Brackets
  (Not available with Sterilwall or Perforated Wall Liner)