KRUEGER
Excellence in Air Distribution

KLPP Unit Size 2

Electric Heat with Electronic Controls

JOB NAME _____
ENGINEER _____
CONTRACTOR _____
TAG _____

SUBMITTAL SHEET

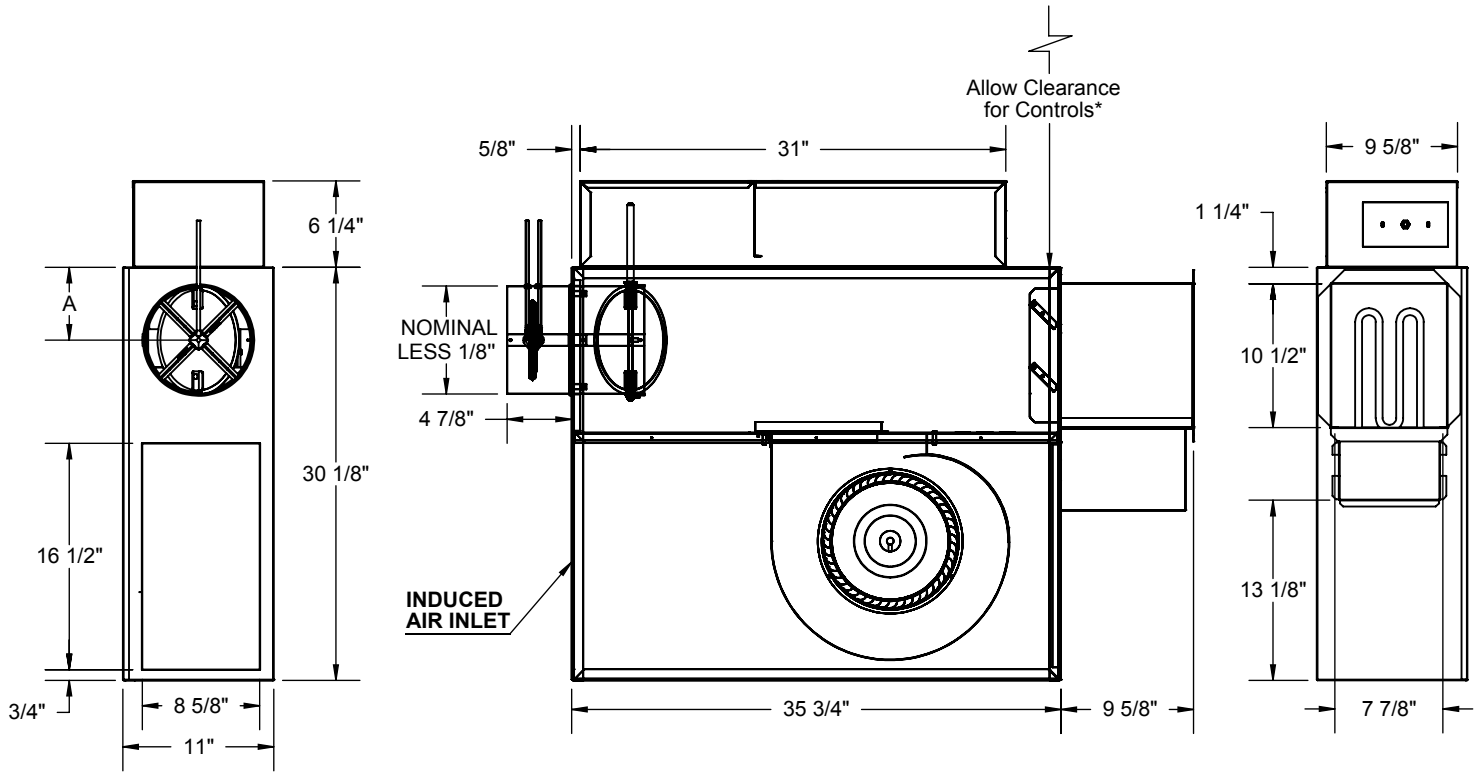

Inlet Size	A
06"	5"
08"	6"
10"	7"

INLET VIEW **PLAN VIEW - LEFT HAND UNIT** **DISCHARGE VIEW**

STANDARD FEATURES:

- 20GA. Galvanized Steel Construction
- Steel Control Enclosure for Electronic Components
- 1/2'' Thick Dual Density Fiberglass Insulation Meeting NFPA 90A and UL181 Safety Requirements
- 1/6 HP Single Speed, Single Phase, Permanently Lubricated PSC Motor
  ☐ 120V ☐ 208/240V ☐ 277V
- Field Adjustable Speed Controller
- Bottom Access Panel for Service
- 4 Quadrant, Center Averaging Inlet Flow Sensor
- Factory Supplied 24 Volt Control Transformer for Electronic Controls
- ETL Listed
- Performance Data per AHRI Standard 880
- Variety of Direct Digital or Analog Electronic Control Packages Available

*Check NEC for Unit Clearance Requirements

OPTIONAL FEATURES:

☐ 1/3 HP ECM Motor with Permanently Lubricated Ball Bearings and Constant Airflow Program
  ☐ Manual Control ☐ 0-10Vdc Remote Control
  ☐ 2-10Vdc Remote Control
  ☐ 120V ☐ 208/240V ☐ 277V

➢ Liners
  ☐ 1/2'' Cellular Insulation ☐ No Liner
  ☐ 1/2'' Foil Encapsulated Fiberglass Insulation
  ☐ Solid Metal Liner with 1/2'' Dual Density Fiberglass
  ☐ Perforated Metal Liner with 1/2'' Dual Density Fiberglass

☐ Construction Type Air Filter – 18'' x 11'' x 1"
☐ Linear Averaging Inlet Flow Sensor
☐ LineaHeat Controlled SSR Heat
  ☐ Discharge Temperature Sensor
☐ 24 VAC SSR ☐ Manual Reset Cutoff
☐ Left Hand Controls ☐ Right Hand Controls
☐ Motor Fusing ☐ Hanger Brackets
☐ Dust Tight Control Enclosure

➢ Door Interlocking Disconnect Switch
  ☐ Fused ☐ Non-Fused